MECHANICS AND MATERIALS I

13

Ali Javili

Bilkent University

MECHANICS AND MATERIALS I

Torsion ii

Sections ... 5.3 – 5.4

Chap. 5

[Hibbeler 9th edition]

Ali Javili

Bilkent University

Deformation $\overset{?}{\longleftrightarrow}$ Loading

Chap. 2 $\updownarrow$ $\qquad$ $\updownarrow$ Chap. 1

Strain $\longleftrightarrow$ Stress

Chap. 3

Deformation $\overset{?}{\longleftrightarrow}$ Loading

Chap. 2 $\updownarrow$ $\qquad$ $\updownarrow$ Chap. 1

Strain $\longleftrightarrow$ Stress

Chap. 3

$\delta \longleftrightarrow P$

$\updownarrow \qquad \updownarrow$

$$\delta = \frac{PL}{EA}$$

$\varepsilon \longleftrightarrow E$

AXIAL LOADING

Deformation $\overset{?}{\longleftrightarrow}$ Loading

Chap. 2 $\updownarrow$ $\qquad$ $\updownarrow$ Chap. 1

Strain $\longleftrightarrow$ Stress

Chap. 3

$\delta \longleftrightarrow P$

$\delta = \dfrac{PL}{EA}$

$\varepsilon \longleftrightarrow \sigma$

AXIAL LOADING

ANGLE OF TWIST $\phi \longleftrightarrow T$ TORQUE (TORSIONAL MOMENT)

$\phi \updownarrow ? \updownarrow T$

$? \longleftrightarrow ?$

TORSION

POWER TRANSMISSION

- Shafts are often used to transmit power generated e.g. by
  - electric motors,
  - combustion engines

POWER TRANSMISSION

- Shafts are often used to transmit power generated e.g. by electric motors, combustion engines
  - Shafts transmit power via rotation

$$P = \frac{dW}{dt}$$

power

POWER TRANSMISSION

- Shafts are often used to transmit power generated e.g. by electric motors, combustion engines
- Shafts transmit power via rotation

$$P = \frac{dW}{dt} \qquad dW = T\,d\theta \quad \text{analogous to} \quad dW = F\,dx$$

power

POWER TRANSMISSION

$$P = \frac{dW}{dt} \qquad dW = T\,d\theta \quad \text{analogous to } dW = F\,dx$$

Frequency (Hz)

$$P = \frac{T\,d\theta}{dt} = T\,\underbrace{\frac{d\theta}{dt}}_{\omega} = T\,\omega = 2\pi f\,T$$

(cycle/sec)

Angular Velocity $\rightarrow$ ω (rad/sec) $\Leftarrow$ $\omega = 2\pi f$

POWER TRANSMISSION

$$P = \frac{dW}{dt} \qquad dW = T\,d\theta \quad \text{analogous to } dW = F\,dx$$

$$P = \frac{T\,d\theta}{dt} = T\frac{d\theta}{dt} = T\omega = 2\pi f T$$

FOR DESIGN

Replace by $\tau_{all.}$

RECALL: $\tau = \frac{Tr}{J} \Rightarrow \tau_{max} = \frac{Tc}{J}$ (τ_{max}) $\Rightarrow T = \tau_{max}\frac{J}{c} \Rightarrow \frac{T}{\tau_{max}} = \frac{J}{c}$

Exercise 1 . [similar to ... P. 193 ... 5.4]

THE SOLID STEEL SHAFT AB SHOWN IN THE FIGURE TRANSMITS 3750 W FROM THE MOTOR M TO WHICH IT IS ATTACHED. IF THE SHAFT ROTATES AT $\omega = 175$ rpm AND STEEL HAS THE ALLOWABLE SHEAR STRESS $\tau_{allow} = 100$ MPa, DETERMINE THE REQUIRED SHAFT DIAMETER.

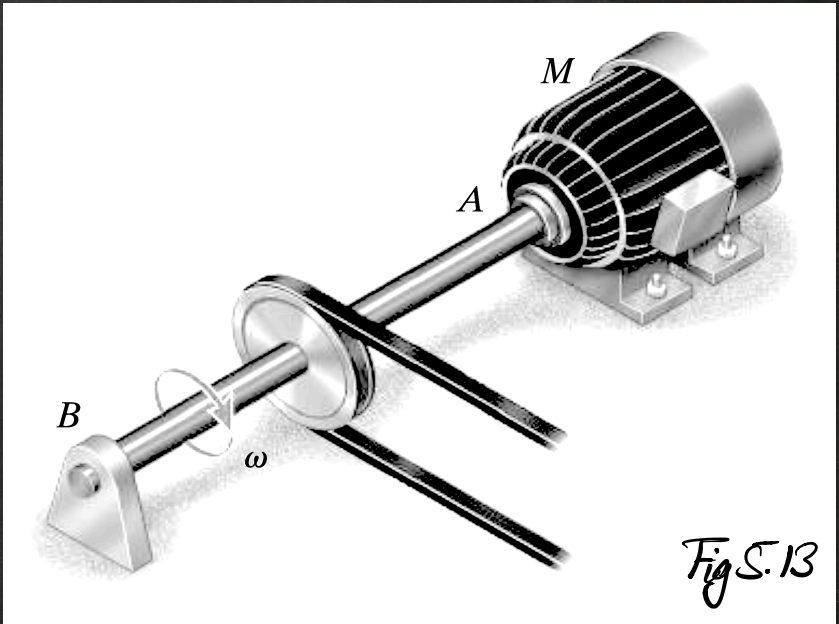

Fig 5.13

$$\omega = 175 \text{ rpm}$$

$$= 175 \frac{\text{rev.}}{\text{min.}} \times \frac{1 \text{ min.}}{60 \text{ sec.}} \times \frac{2\pi \text{ rad}}{1 \text{ rev.}}$$

$$= 18.33 \text{ rad/s}$$

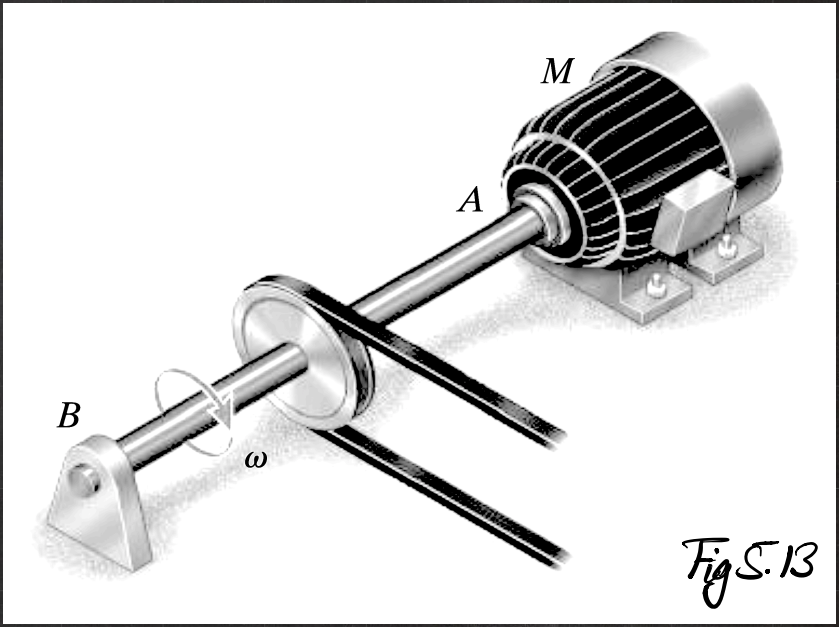

Fig 5.13

$\omega = 175 \text{ rpm}$

$= 175 \dfrac{\text{rev.}}{\text{min.}} \times \dfrac{1 \text{ min.}}{60 \text{ sec.}} \times \dfrac{2\pi \text{ rad}}{1 \text{ rev.}}$

$= 18.33 \text{ rad/s}$

$\omega = 18.33$

$P = T\omega \Rightarrow T = 204.6 \text{ N.m}$

3750 watt

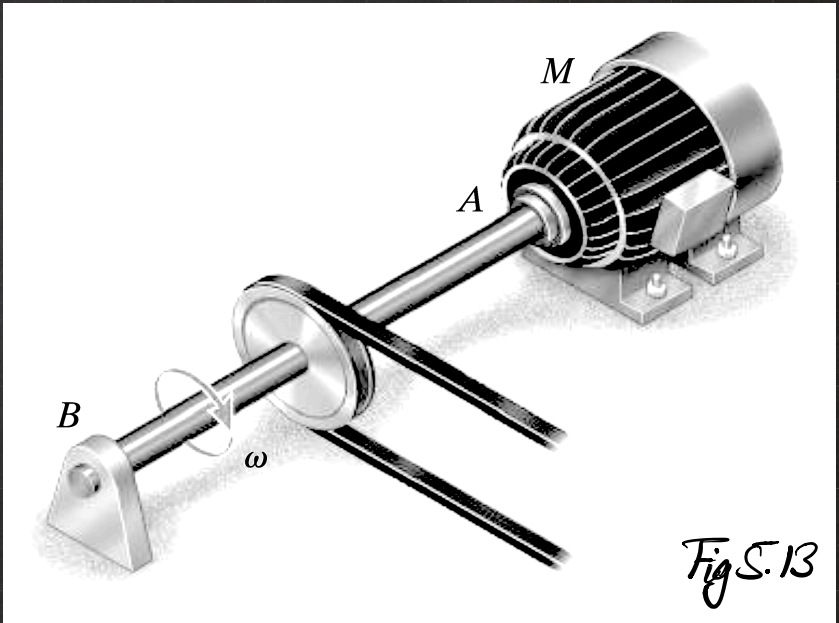

Fig 5.13

$\omega = 175 \text{ rpm}$

$= 175 \dfrac{\text{rev.}}{\text{min.}} \times \dfrac{1 \text{ min.}}{60 \text{ sec.}} \times \dfrac{2\pi \text{ rad}}{1 \text{ rev.}}$

$= 18.33 \text{ rad/s}$

$\omega = 18.33$

$P = T\omega \Rightarrow T = 204.6 \text{ N.m}$

3750 watt

$100 \times 10^6 \quad \dfrac{T}{\tau_{all.}} = \dfrac{J}{c} \quad \pi/2\, c^4$

$\Rightarrow c = 10.92 \text{ mm} \Rightarrow d = 2c \simeq 22 \text{ mm}$

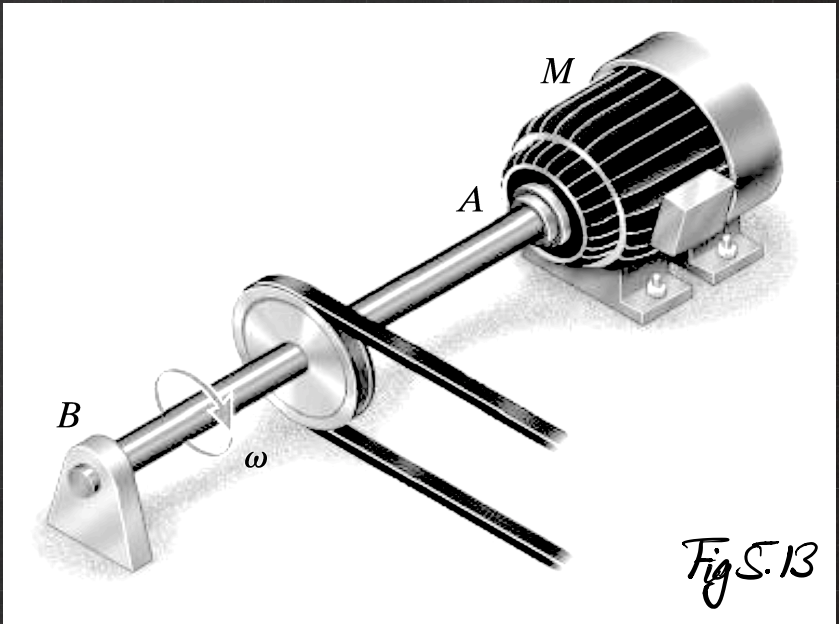

Fig 5.13

ANGLE OF TWIST

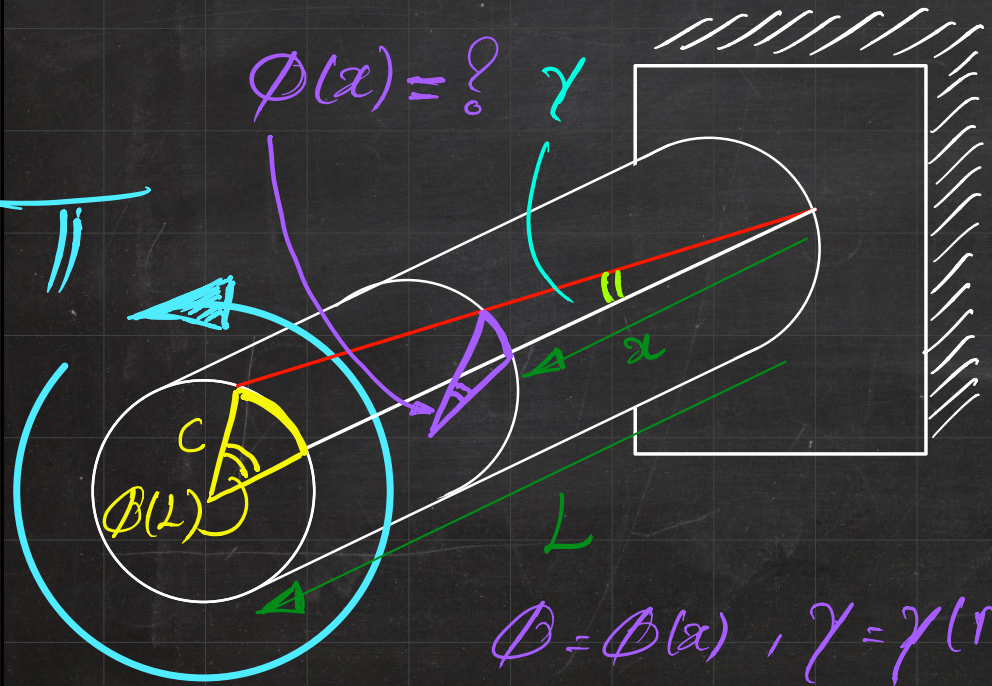

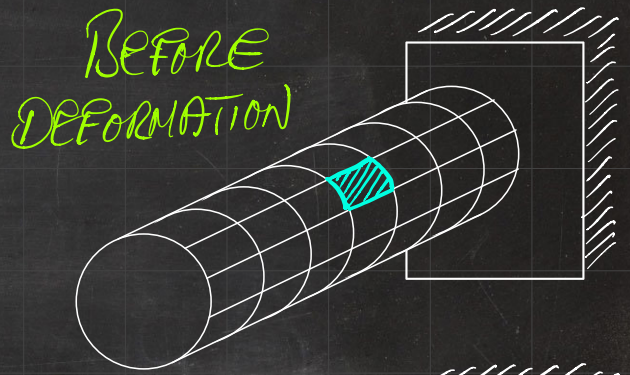

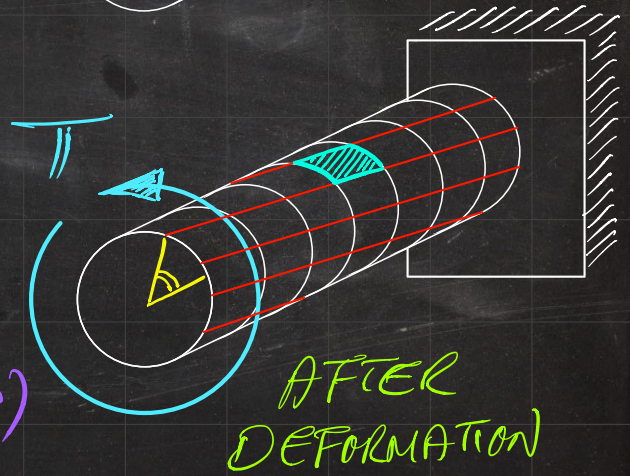

$$\phi = \phi(x) \ , \ \gamma = \gamma(r)$$

ANGLE OF TWIST

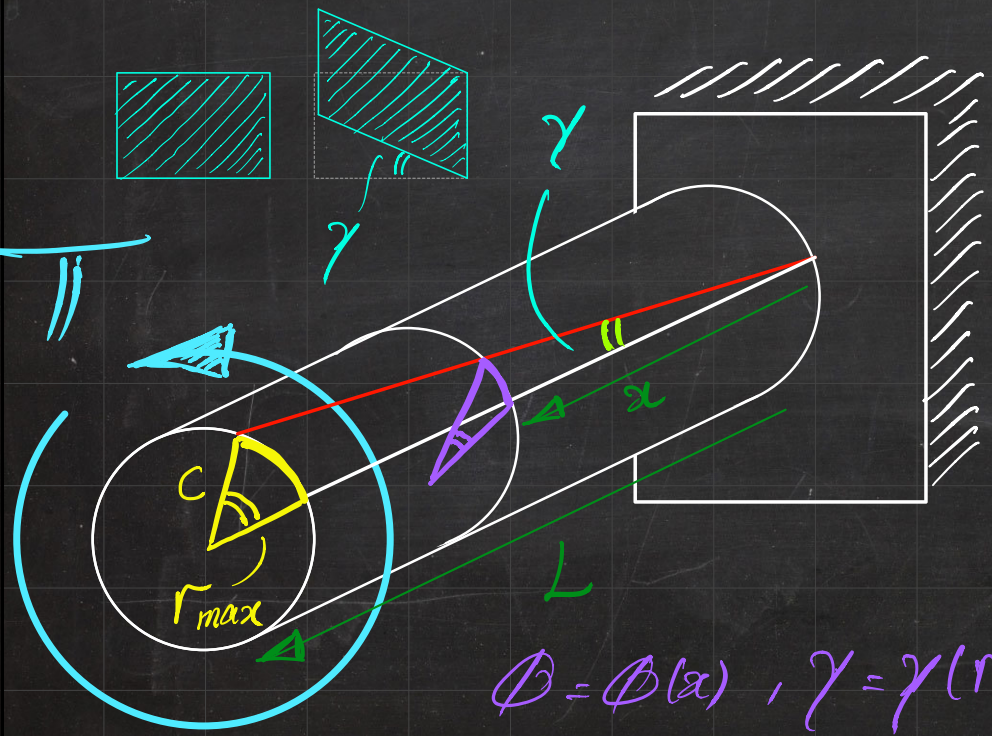

$$\phi = \phi(x) \ , \ \gamma = \gamma(r)$$

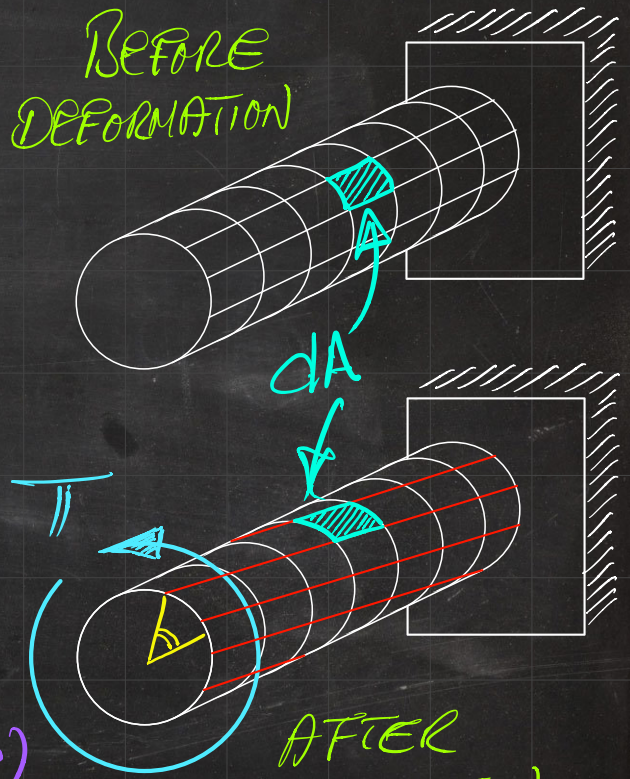

ANGLE OF TWIST

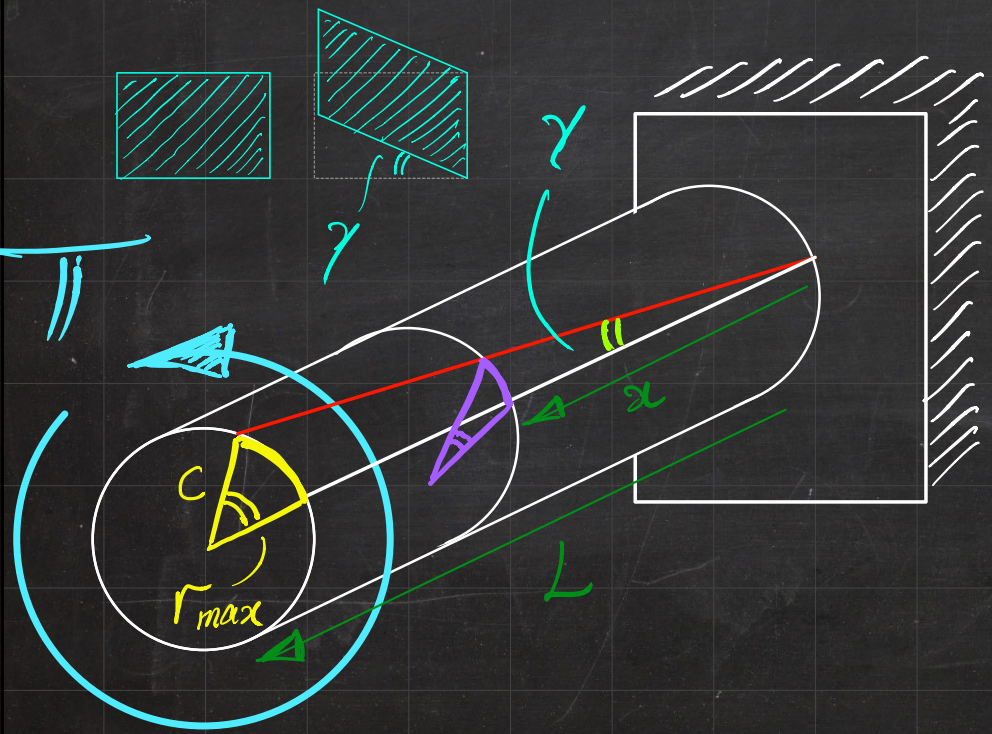

RECALL: $\gamma = r\dfrac{d\phi}{dx}$ and $\dfrac{d\phi}{dx} = \dfrac{\phi}{L}$

Const.

$\phi(L)$

Angle of twist

ANGLE OF TWIST

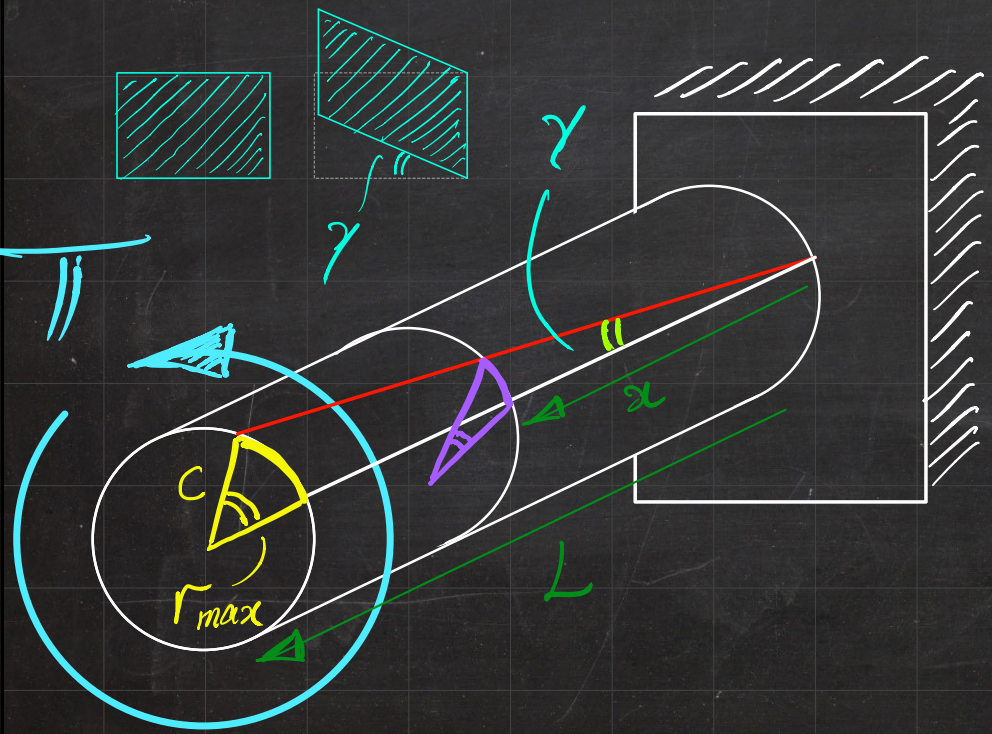

RECALL: $\gamma = r\dfrac{d\phi}{dx}$ and $\dfrac{d\phi}{dx} = \dfrac{\phi}{L}$

Const.

$\phi(L)$

Angle of twist

$\tau = G\gamma \Rightarrow \gamma = \dfrac{\tau}{G}$

ANGLE OF TWIST

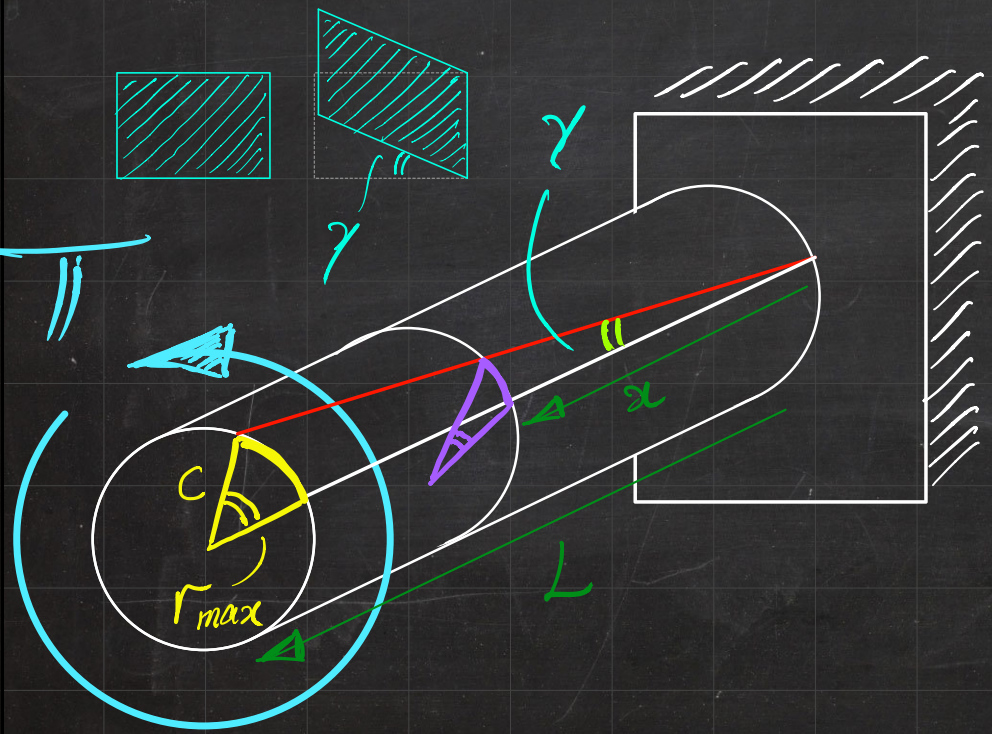

RECALL: $\gamma = r\dfrac{d\phi}{dx}$ and $\dfrac{d\phi}{dx} = \dfrac{\phi}{L}$

const.

$\phi(L)$

Angle of twist

$\tau = G\gamma \Rightarrow \gamma = \dfrac{\tau}{G}$

$\Rightarrow \dfrac{\tau}{G} = r\dfrac{\phi}{L}$

ANGLE OF TWIST

RECALL: $\tau = \dfrac{Tr}{J}$

RECALL: $\gamma = r\dfrac{d\phi}{dx}$ and $\dfrac{d\phi}{dx} = \dfrac{\phi}{L}$

Const. $\phi(L)$

Angle of twist

$\tau = G\gamma \Rightarrow \gamma = \dfrac{\tau}{G}$

$\Rightarrow \dfrac{\tau}{G} = r\dfrac{\phi}{L}$

ANGLE OF TWIST

RECALL: $\gamma = r\dfrac{d\phi}{dx}$ and $\dfrac{d\phi}{dx} = \dfrac{\phi}{L}$

Const. $\phi(L)$

Angle of twist

RECALL: $\tau = \dfrac{Tr}{J}$

$$\Rightarrow \frac{Tr}{GJ} = r\frac{\phi}{L}$$

$$\tau = G\gamma \Rightarrow \gamma = \frac{\tau}{G}$$

$$\Rightarrow \frac{\tau}{G} = r\frac{\phi}{L}$$

ANGLE OF TWIST

RECALL: $\gamma = r\dfrac{d\phi}{dx}$ and $\dfrac{d\phi}{dx} = \dfrac{\phi}{L}$

Const. $\phi(L)$

Angle of twist

RECALL: $\tau = \dfrac{Tr}{J}$

$$\Rightarrow \frac{Tr}{GJ} = r\frac{\phi}{L}$$

$\phi(L)$

$$\Rightarrow \phi = \frac{TL}{GJ}$$

$$\tau = G\gamma \Rightarrow \gamma = \frac{\tau}{G}$$

$$\Rightarrow \frac{\tau}{G} = r\frac{\phi}{L}$$

ANGLE OF TWIST

RECALL: $\gamma = r\dfrac{d\phi}{dx}$ and $\dfrac{d\phi}{dx} = \dfrac{\phi}{L}$

Const. $\phi(L)$

Angle of twist

RECALL: $\tau = \dfrac{Tr}{J}$

$$\Rightarrow \frac{Tr}{GJ} = r\frac{\phi}{L}$$

$\phi(L)$

$$\tau = G\gamma \Rightarrow \gamma = \frac{\tau}{G}$$

$$\phi(x) = \frac{Tx}{GJ} \Leftarrow\!\Rightarrow \phi = \frac{TL}{GJ}$$

$$\frac{\phi(x)}{x} = \frac{\phi(L)}{L}$$

$$\Rightarrow \frac{\tau}{G} = r\frac{\phi}{L}$$

ANGLE OF TWIST

ϕ	δ
T	P
L	L
G	E
J	A
γ	ε
τ	σ

$$\phi \longleftrightarrow T$$

$$\phi = \frac{TL}{GJ}$$

$$\gamma \longleftrightarrow \tau$$

TORSION

$$\delta \longleftrightarrow P$$

$$\delta = \frac{PL}{EA}$$

$$\varepsilon \longleftrightarrow \sigma$$

AXIAL LOADING

Deformation $\longleftrightarrow$ Loading

?

Chap. 2 $\updownarrow$ $\updownarrow$ Chap. 1

Chap. 3

Strain $\longleftrightarrow$ Stress

ANGLE OF TWIST

$$\phi \longleftrightarrow T$$

$$\updownarrow \qquad \phi = \frac{TL}{GJ} \qquad \updownarrow$$

$$\gamma \longleftrightarrow \tau$$

$$\phi(L) = \frac{TL}{GJ}$$

$$\phi(x) = \frac{Tx}{GJ}$$

Composite Shafts

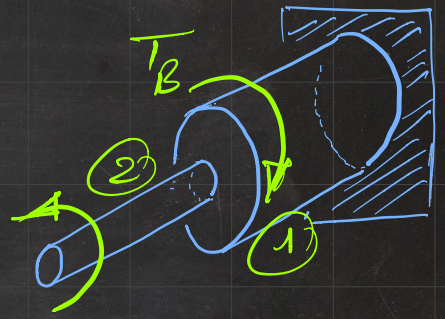

$\phi_{A/C}$: twist angle of A w.r.t. C

$\phi_A \Leftarrow$ fixed

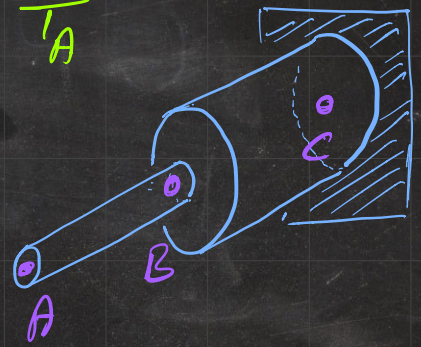

$$\phi_{A/C} = \phi_{A/B} + \phi_{B/C}$$

$$= \frac{T_2 L_2}{G_2 J_2} + \frac{T_1 L_1}{G_1 J_1}$$

ANGLE OF TWIST

$\phi \longleftrightarrow T$

$\updownarrow \qquad \phi = \dfrac{TL}{GJ} \qquad \updownarrow$

$\gamma \longleftrightarrow \tau$

$$\phi(L) = \frac{TL}{GJ}$$

$$\phi(x) = \frac{Tx}{GJ}$$

Composite Shafts

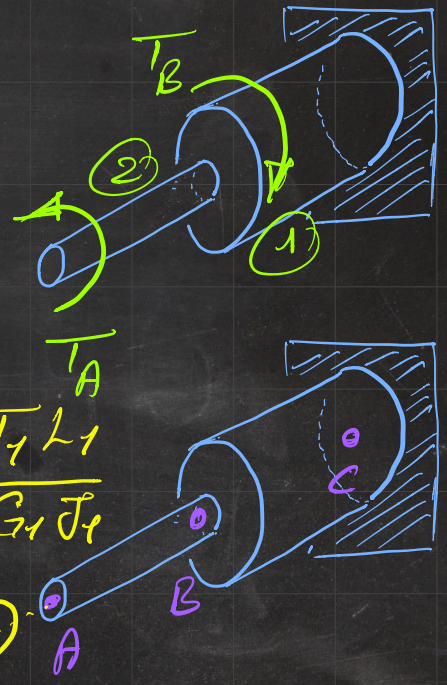

$$\phi_{A/C} = \phi_{A/B} + \phi_{B/C}$$

$$= \frac{T_2 L_2}{G_2 J_2} + \frac{T_1 L_1}{G_1 J_1}$$

internal from A to B

$T_2 = T_A$

$T_1 = T_A - T_B$

internal from B to C

Convention/Assumption (CCW)

ANGLE OF TWIST

$$\phi \longleftrightarrow T$$

$$\phi = \frac{TL}{GJ}$$

$$\gamma \longleftrightarrow \tau$$

$$\phi(L) = \frac{TL}{GJ}$$

$$\phi(x) = \frac{Tx}{GJ}$$

Composite Shafts

$$\phi_{tot} = \sum \frac{TL}{GJ}$$

Continuously Variable

$$\phi = \int_0^L \frac{T(x)\,dx}{G(x)\,J(x)}$$

EXAMPLE:

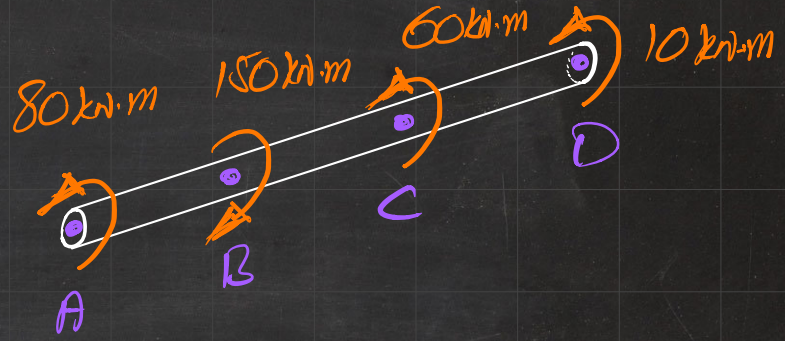

EXAMPLE:

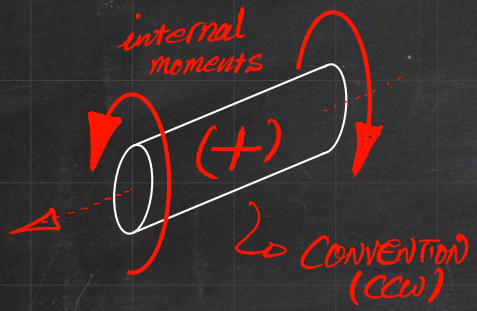

Assumption

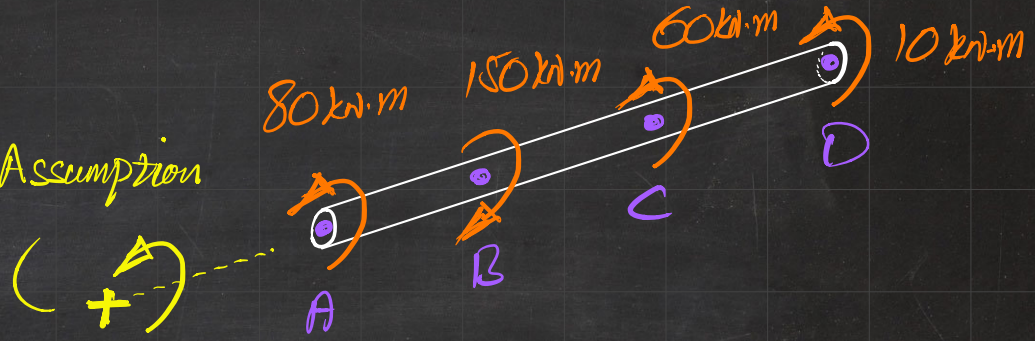

EXAMPLE:

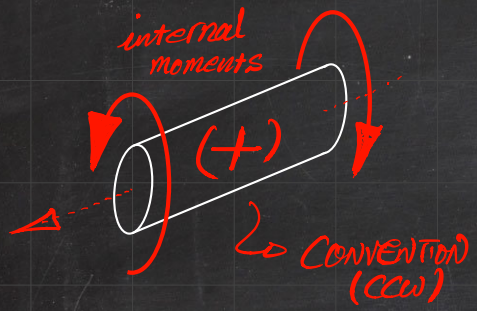

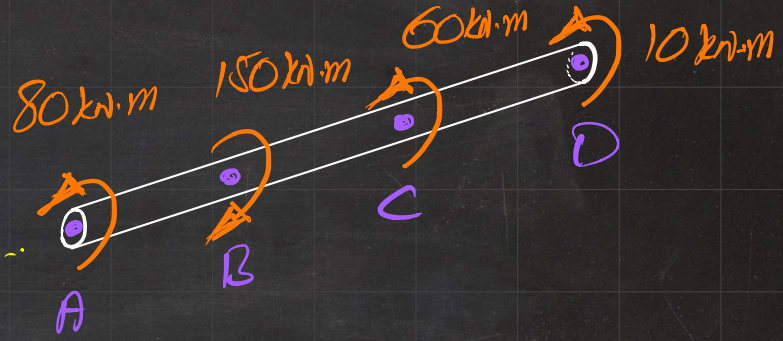

$$\phi_{A/D} = \phi_{A/B} + \phi_{B/C} + \phi_{C/D}$$

EXAMPLE:

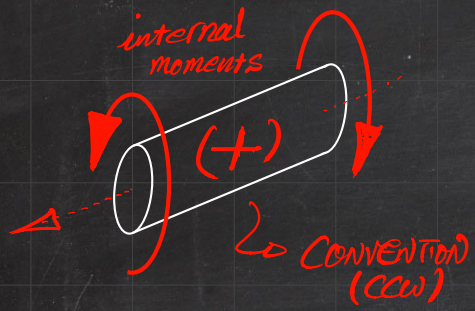

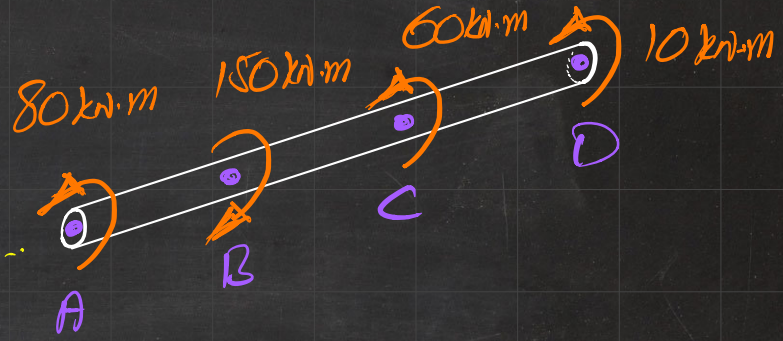

$$\phi_{A/D} = \phi_{A/B} + \phi_{B/C} + \phi_{C/D}$$

$$= \frac{T_{AB} L_{AB}}{G_{AB} J_{AB}} + \frac{T_{BC} L_{BC}}{G_{BC} J_{BC}} + \frac{T_{CD} L_{CD}}{G_{CD} J_{CD}}$$

EXAMPLE:

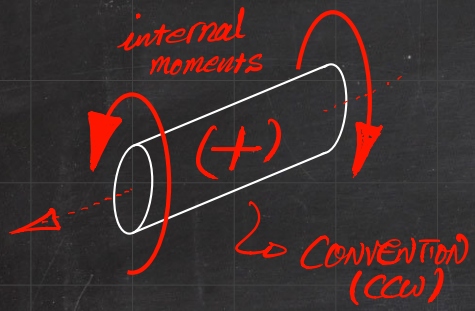

Assumption

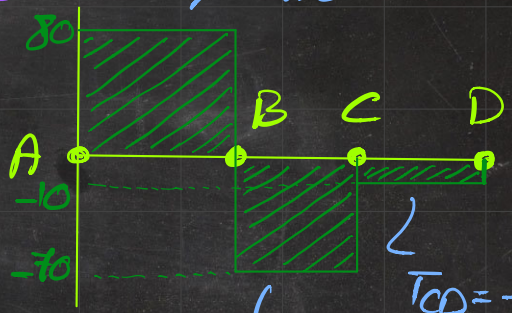

$T_{AB} = +80$ kN·m

$T_{CD} = -10$ kN·m

$T_{BC} = -70$ kN·m

$$\phi_{A/D} = \phi_{A/B} + \phi_{B/C} + \phi_{C/D}$$

$$= \frac{T_{AB} L_{AB}}{G_{AB} J_{AB}} + \frac{T_{BC} L_{BC}}{G_{BC} J_{BC}} + \frac{T_{CD} L_{CD}}{G_{CD} J_{CD}}$$

Exercise 2 . [similar to ... P. 209 ... 5.5]

THE GEARS ATTACHED TO THE STEEL SHAFT ARE SUBJECTED TO THE TORQUES SHOWN. DETERMINE THE DISPLACEMENT OF THE TOOTH P ON GEAR A. THE SHAFT TURNS FREELY WITHIN THE BEARING AT B.

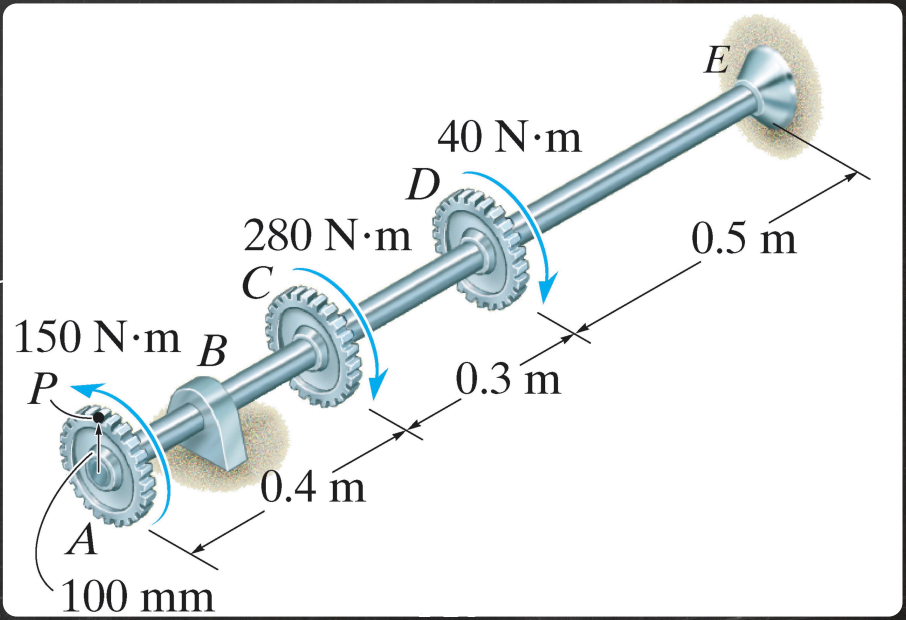

THE SHEAR MODULUS OF THE SHAFT IS $G = 80$ GPa AND ITS DIAMETER IS 14 mm.

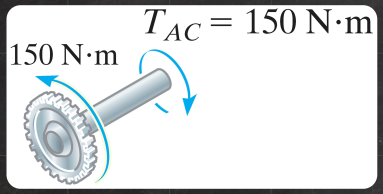
$T_{AC} = 150$ N·m
150 N·m

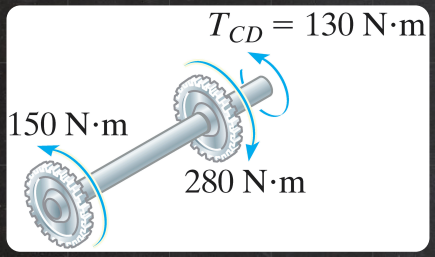
$T_{CD} = 130$ N·m
150 N·m
280 N·m

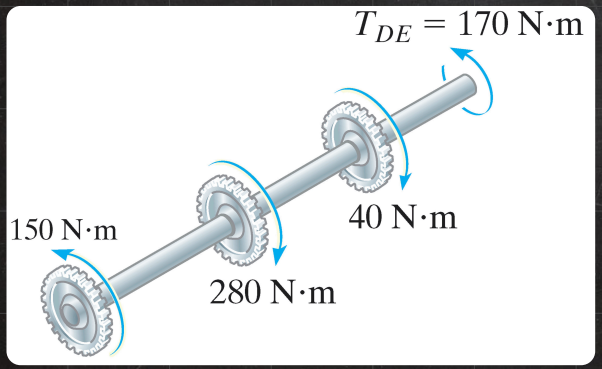
$T_{DE} = 170$ N·m
150 N·m
280 N·m
40 N·m

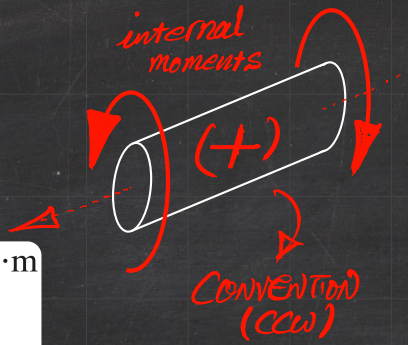
internal moments
(+)
CONVENTION (CCW)

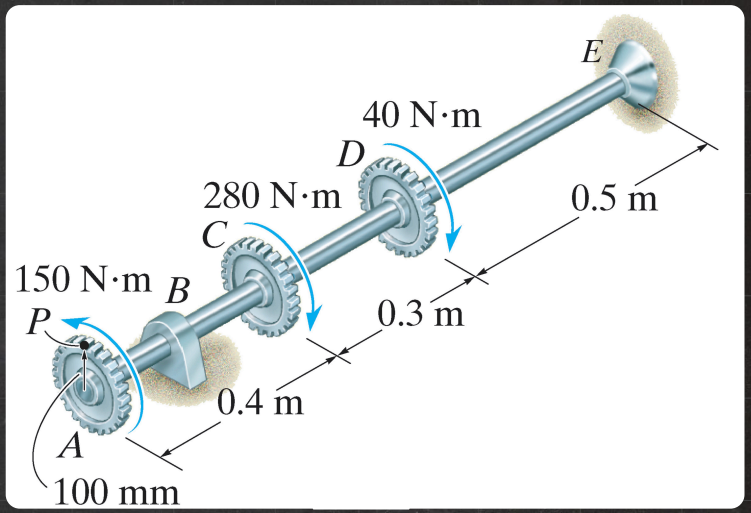
E
40 N·m
D
280 N·m
C
150 N·m
B
P
A
100 mm
0.5 m
0.3 m
0.4 m

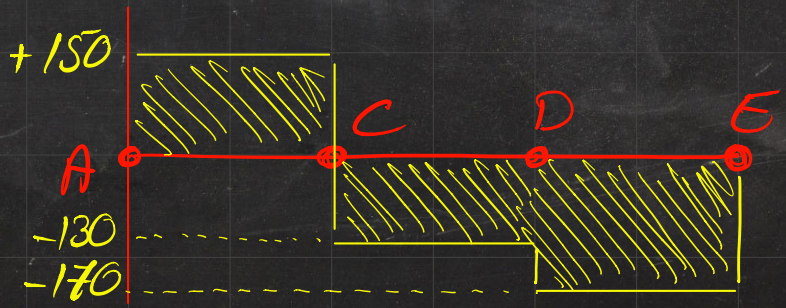
+150
A
C
D
E
-130
-170

$T_{AC} = 150$ N·m, $T_{CD} = -130$ N·m, $T_{DE} = -170$ N·m

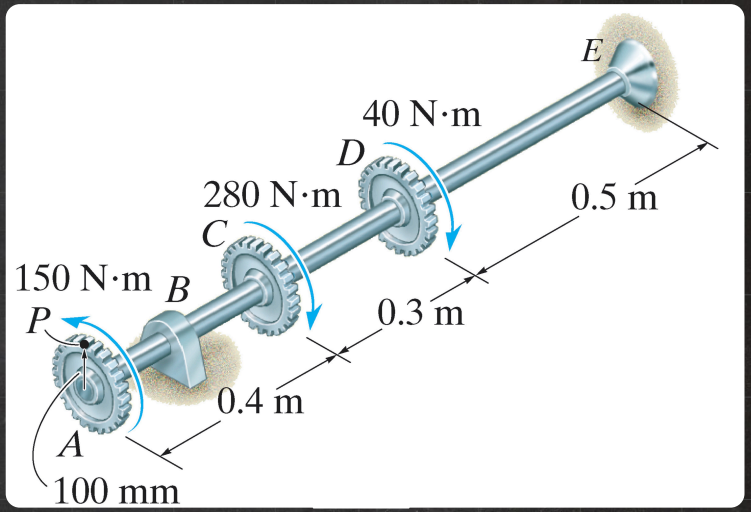

$$J = \frac{\pi}{2} c^4 = \frac{\pi}{2} \frac{d^4}{16} = 3.77 \times 10^{-9} \text{ m}^4$$

$d \to 0.014$

$\phi_{A/E} \rightsquigarrow E$: fixed

$$\phi_A = \phi_{A/C} + \phi_{C/D} + \phi_{D/E}$$

$$= \frac{T_{AC} L_{AC}}{GJ} + \frac{T_{CD} L_{CD}}{GJ} + \frac{T_{DE} L_{DE}}{GJ}$$

$L_{AC} \to 0.4$, $L_{CD} \to 0.3$, $L_{DE} \to 0.5$

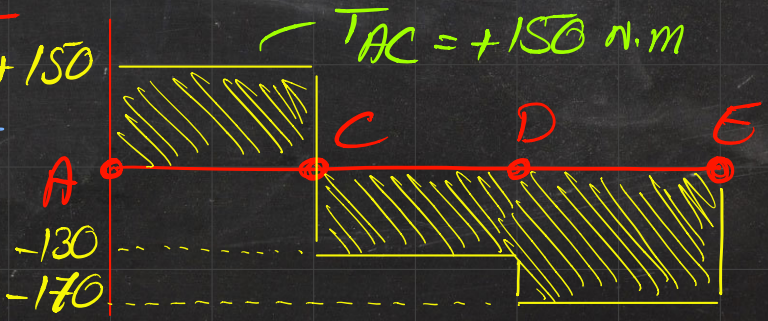

$T_{AC} = 150$ N·m, $T_{CD} = -130$ N·m, $T_{DE} = -170$ N·m

$$J = \frac{\pi}{2} c^4 = \frac{\pi}{2} \frac{d^4}{16} = 3.77 \times 10^{-9} \text{ m}^4$$

$d \to 0.014$

$\phi_{A/E} \rightsquigarrow E$: fixed

$$\phi_A = \phi_{A/C} + \phi_{C/D} + \phi_{D/E}$$

$$= \frac{T_{AC} L_{AC}}{GJ} + \frac{T_{CD} L_{CD}}{GJ} + \frac{T_{DE} L_{DE}}{GJ}$$

$L_{AC} \to 0.4$, $L_{CD} \to 0.3$, $L_{DE} \to 0.5$

$\Rightarrow \phi_A = -0.2121$ (rad)

$\Rightarrow \delta_P = \phi_A \times r_A$ ($r_A \to 100$ mm)

$\Rightarrow \delta_P = 21.2$ mm

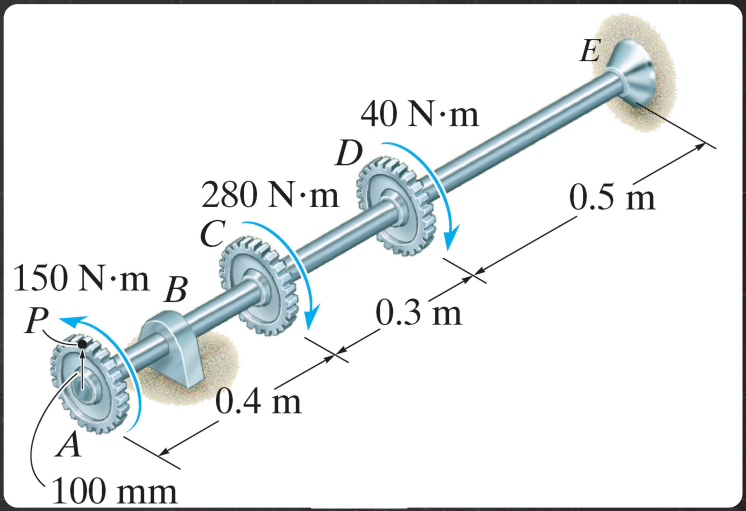

Exercise 3 . [similar to ... P. 211 ... 5.7]

THE 0.05m - DIAMETER SOLID POST WITH SHEAR MODULUS $G = 40$ GPa IS BURIED 0.6m IN SOIL. A TORQUE IS APPLIED ON TOP USING A RIGID WRENCH. DETERMINE:

- MAXIMUM SHEAR STRESS IN THE POST.
- ANGLE OF TWIST AT ITS TOP.

ASSUME THAT THE SOIL EXERTS UNIFORM TORSIONAL RESISTANCE AND THE TORQUE IS ABOUT TO TURN THE POST.

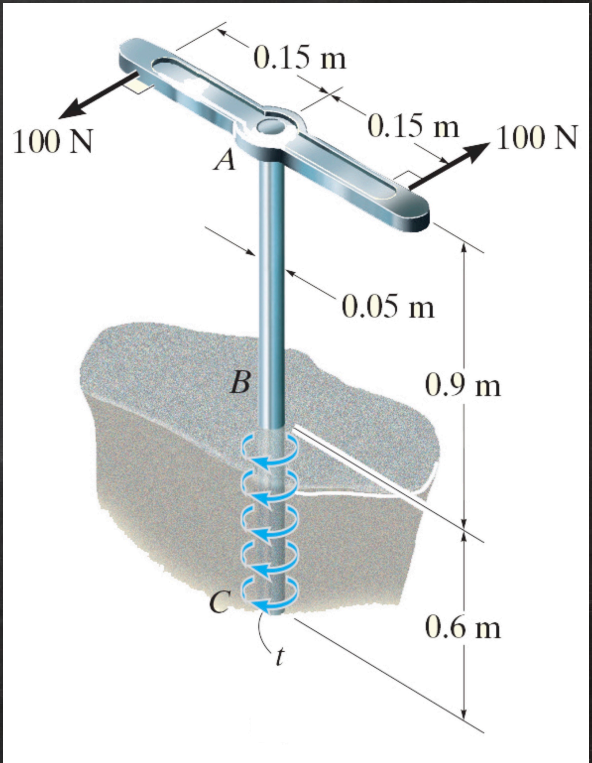

+
A
0.9
B
0.6
x
C

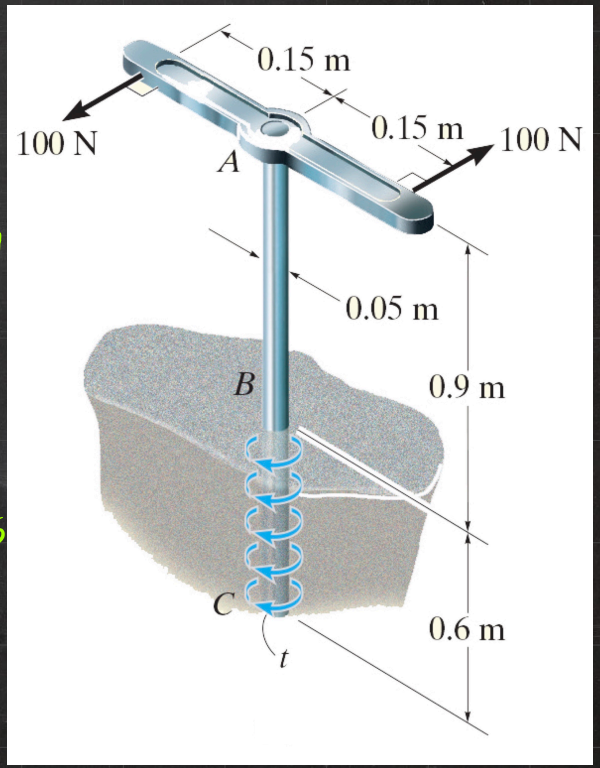
0.15 m
0.15 m
100 N
100 N
A
0.05 m
B
0.9 m
C
0.6 m
t

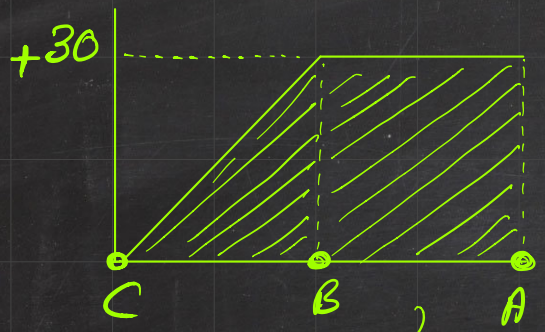

$T_{AB} = +30$ N.m

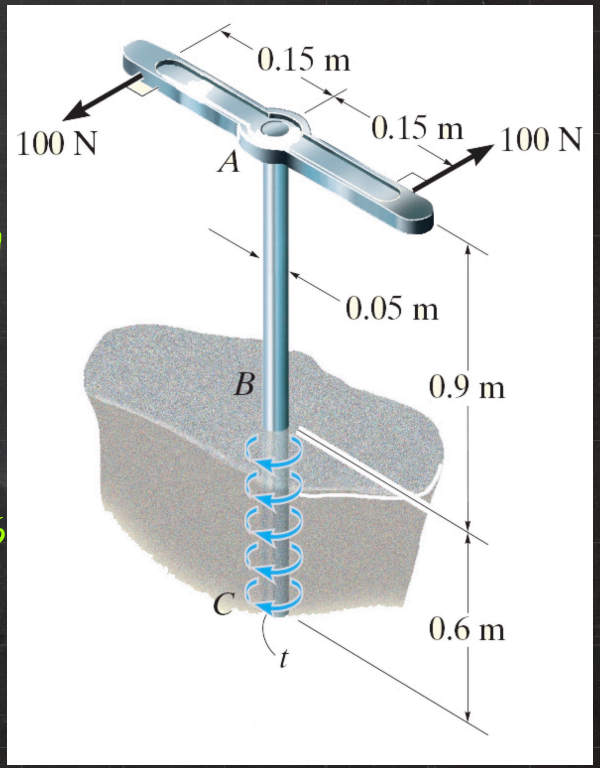

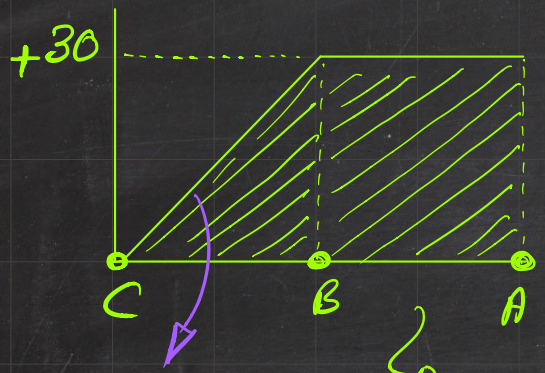

$T_{AB} = +30 \text{ N.m}$

$T_{BC} = tx + T_C$

$T_C = 0$

$T_{BC} = tx$

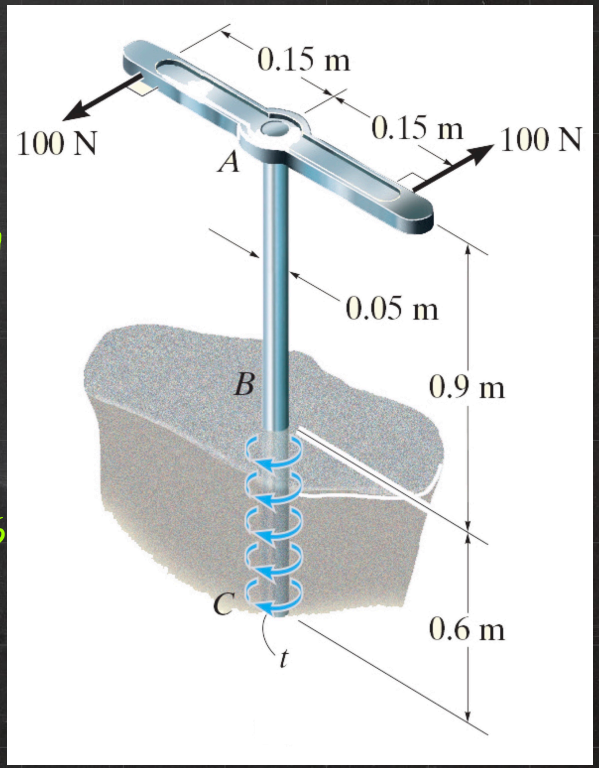

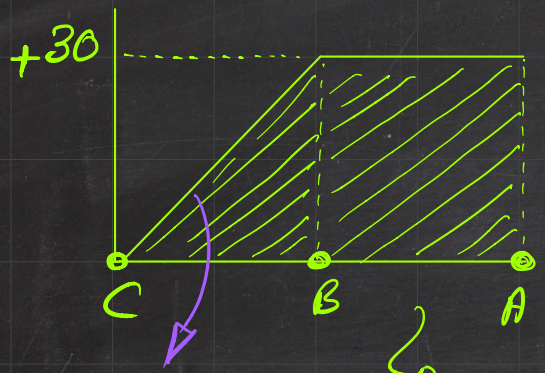

$T_{AB} = +30$ N.m

$T_{BC} = tx + T_C$

$T_C = 0$

$T_{BC} = tx$ ✓ $x = 0.6$

$t = 50$ N.m/m $\Leftarrow$ $T = 30$

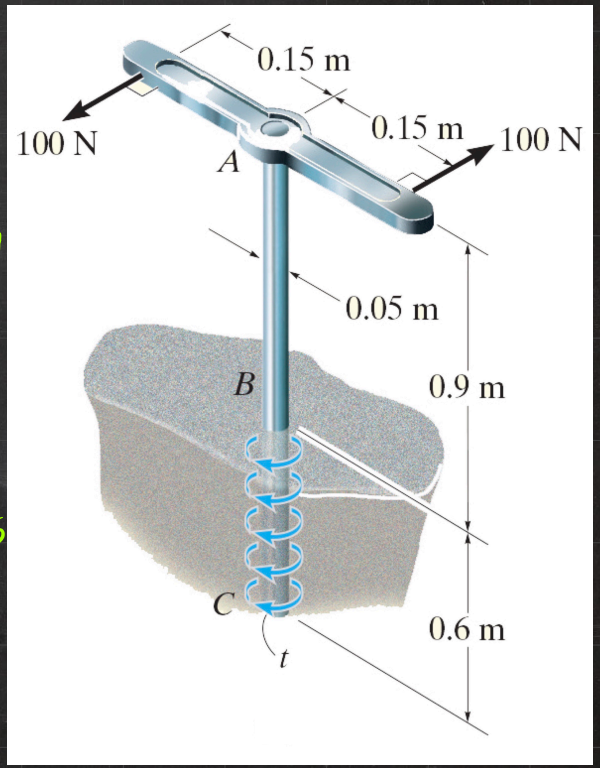

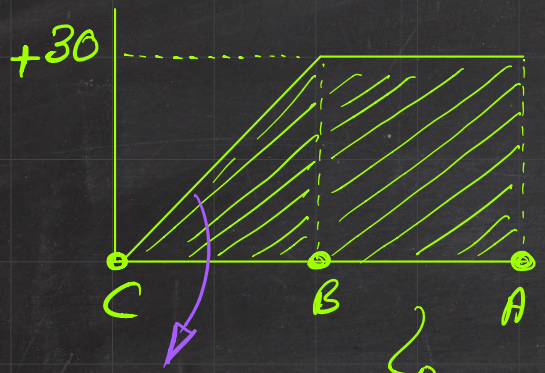

$T_{AB} = +30$ N.m

$T_{BC} = 50\,x$

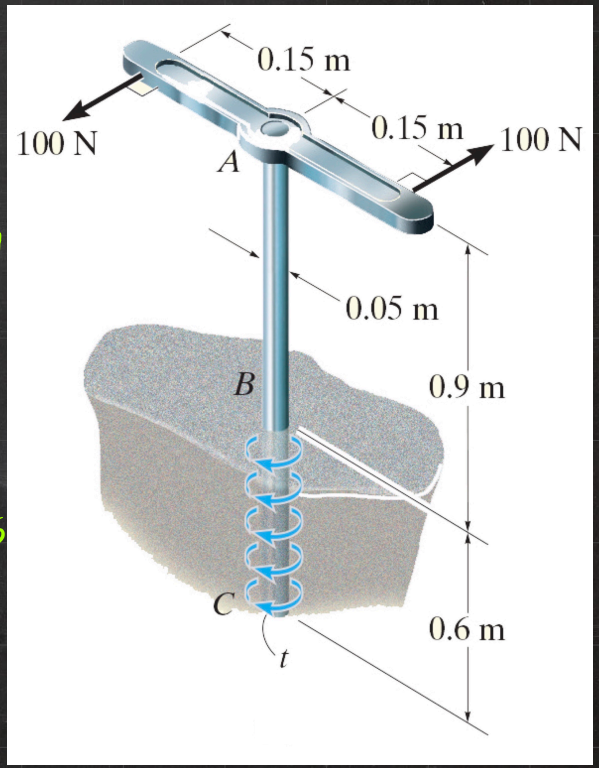

MAX. SHEAR STRESS IN AB

$$\tau_{max} = \frac{T c}{J}$$

C, J : CONSTANT

T_{AB} : MAX

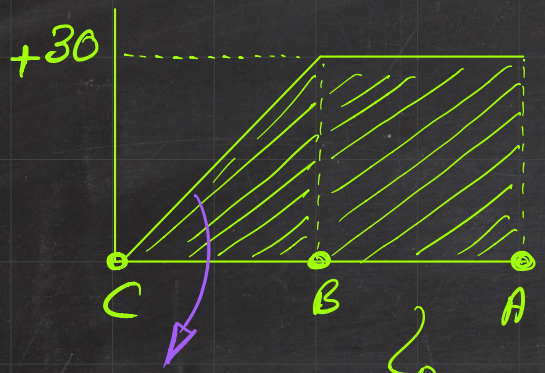

$T_{AB} = +30$ N.m

$T_{BC} = 50\,x$

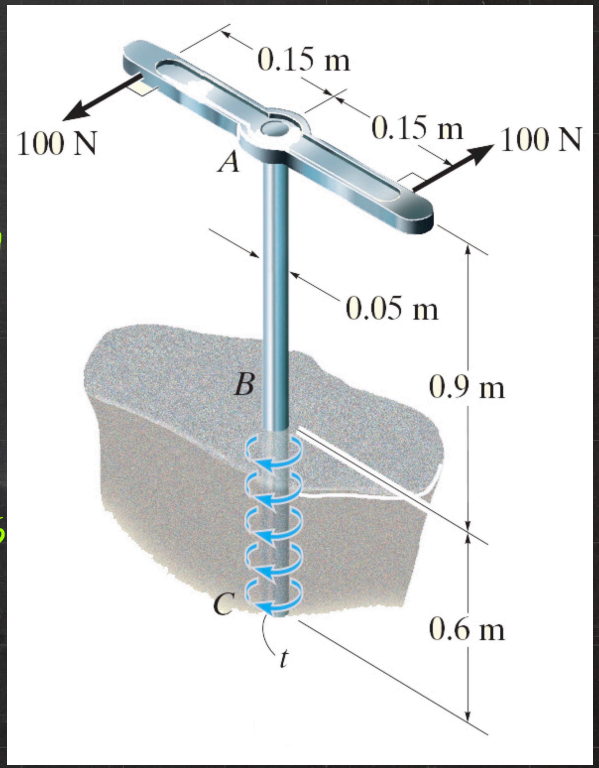

MAX. SHEAR STRESS IN AB

$$\tau_{max} = \frac{Tc}{J} = 1.22 \text{ MPa}$$

$J = \frac{\pi}{2} c^4$

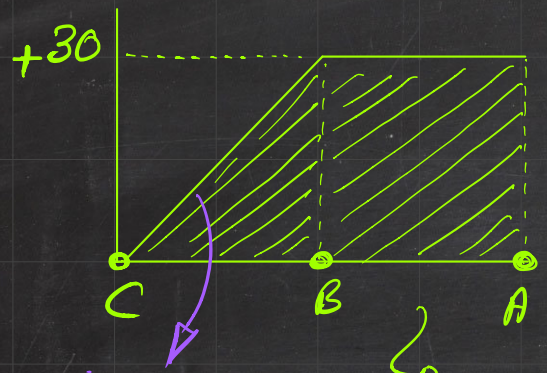

$T_{BC} = 50\,x$

$T_{AB} = +30$ N.m

ϕ_A

$\phi_{A/C} = \phi_{A/B} + \phi_{B/C}$

B w.r.t. C

From C to B

ANGLE OF TWIST

$$= \frac{T_{AB} L_{AB}}{GJ} + \int_C^B \frac{T_{BC}\,dx}{GJ}$$

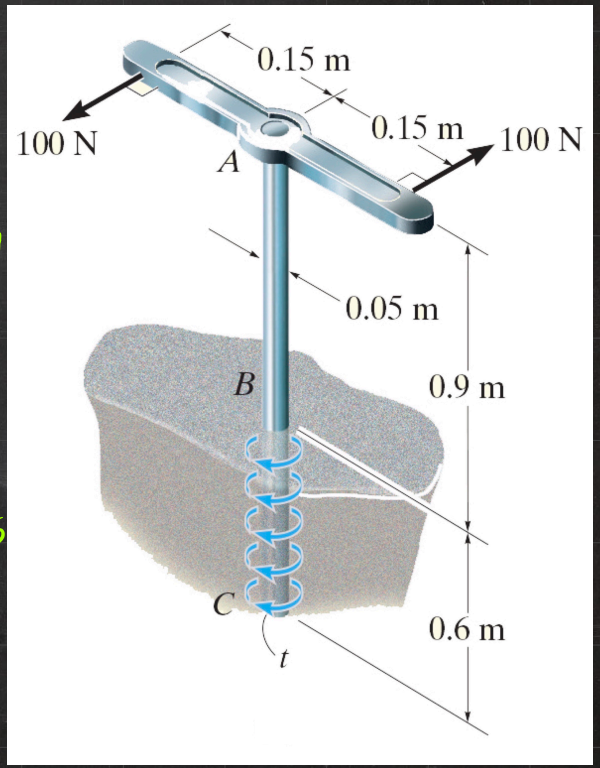

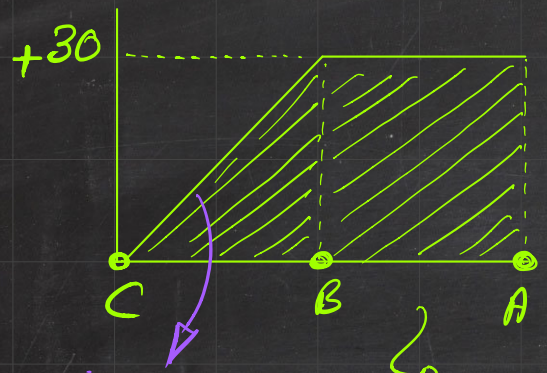

$T_{BC} = 50\,x$

$T_{AB} = +30$ N.m

ϕ_A

$\phi_{A/C} = \phi_{A/B} + \phi_{B/C}$

$T_{BC}(x) = 50x$

ANGLE OF TWIST

$$= \frac{T_{AB} L_{AB}}{GJ} + \int_C^B \frac{T_{BC}\,dx}{GJ}$$

$\Rightarrow \phi_A = 0.0015$ rad

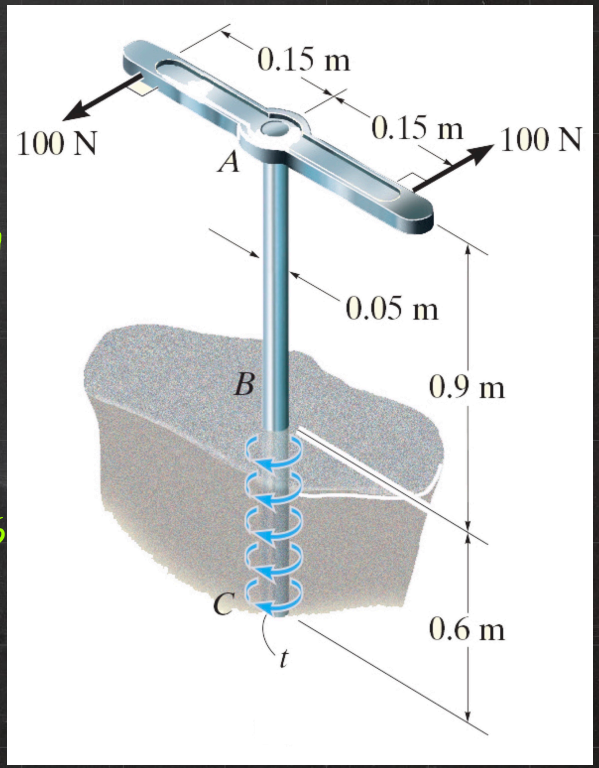

MECHANICS AND MATERIALS I

Torsion ii

Sections ... 5.3 – 5.4

Chap. 5

[Hibbeler 9th edition]

Ali Javili

Bilkent University

MECHANICS AND MATERIALS I

13

Ali Javili

Bilkent University